GSA-LL Series

- 85℃ 2,000Hrs assured.
- Non-solvent proof.
- Height 7mm.
- Low leakage current.
- For CAR-Audio.
- RoHS compliant.
- Halogen-free capacitors are also available.

GSA → GSA-LL

Low Leakage current

LL Series

- 85℃ 2,000Hrs assured.
- Non-solvent proof.
- Very low leakage current.
- For CAR-Audio.
- RoHS compliant.
- Halogen-free capacitors are also available.

MHA → LL

Low Leakage current

SPECIFICATIONS

Item	Characteristics
Rated Voltage Range	6.3 ~ 100 V_{DC}
Operating Temperature Range	-40 ~ +85℃
Capacitance Tolerance	±20% (M) (at 20℃, 120Hz)
Leakage Current(Max.)	GSA-LL Series : I=0.004V(μA) or 0.4μA, whichever is greater. LL Series : I=0.002CV(μA) or 0.2μA, whichever is greater. Where, I:Max. leakage current(μA), C:Nominal capacitance(μF), V:Rated voltage(V_{DC}) (at 20℃, 2 minutes)
Dissipation Factor(Tanδ)	Rated Voltage(V_{DC}): 6.3 / 10 / 16 / 25 / 35 / 50~63 / 100 Tan δ(Max.): 0.24 / 0.20 / 0.16 / 0.14 / 0.12 / 0.10 / 0.07 (at 20℃, 120Hz)
Temperature Characteristics (Max. Impedance ratio)	Rated Voltage(V_{DC}): GSA-LL Series — ; LL Series 6.3 / 10 / 16 / 25 / 35~100 Z(-25℃)/Z(+20℃): 4 / 4 / 3 / 2 / 2 / 2 Z(-40℃)/Z(+20℃): 8 / 8 / 6 / 4 / 3 / 3 (at 120Hz)
Load Life	The following specifications shall be satisfied when the capacitors are restored to 20℃ after the rated voltage is applied for 2,000 hours at 85℃. Capacitance change ≦ ±20% of the initial value Tanδ ≦ 200% of the initial specified value Leakage current ≦ The initial specified value
Shelf Life	The following specifications shall be satisfied when the capacitors are restored to 20℃ after exposing them for 500 hours at 85℃ without voltage applied. The rated voltage shall be applied to the capacitors for a minimum of 30 minutes, at least 24 hours and not more than 48 hours before the measurements. Capacitance change ≦ ±20% of the initial value Tanδ ≦ 200% of the initial specified value Leakage current ≦ The initial specified value
Others	Satisfied characteristics KS C IEC 60384-4

DIMENSIONS OF GSA-LL Series

Unit(mm)

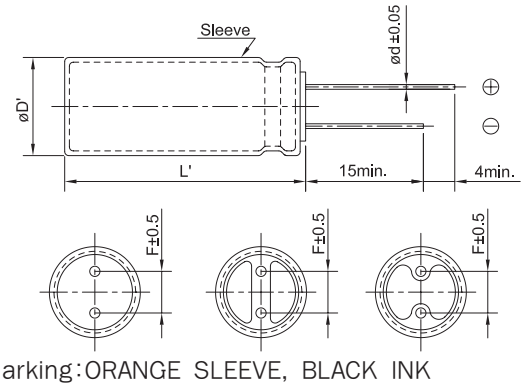

Marking:ORANGE SLEEVE, BLACK INK

ø D	4	5	6.3
ø d	0.45		
F	1.5	2.0	2.5
ø D′	ø D+0.5 max.		
L′	L+1.0 max.		

DIMENSIONS OF LL Series

Unit(mm)

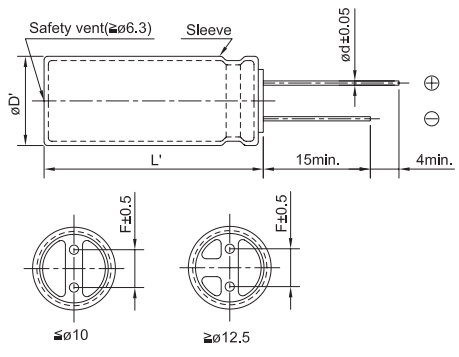

Marking : ORANGE SLEEVE, BLACK INK.

øD	5	6.3	8	10	12.5	16	18
ød	0.5	0.5	0.6	0.6	0.6	0.8	0.8
F	2.0	2.5	3.5	5.0	5.0	7.5	7.5
øD′	øD+0.5 max.						
L′	L+1.5 max.			L+2.0 max.			

RATINGS OF GSA-LL Series

μF \ VDC	6.3		10		16		25		35		50	
1					4×7	9.2					4×7	12
1.5					4×7	11					4×7	14
2.2					4×7	12					4×7	17
3.3					4×7	15	4×7	17	4×7	18	5×7	21
4.7					4×7	20	4×7	21	5×7	22	6.3×7	25
6.8					5×7	23	5×7	25	6.3×7	28	6.3×7	31
10			4×7	25	5×7	27	5×7	30	6.3×7	33	6.3×7	40
15	4×7	28	5×7	30	6.3×7	33	6.3×7	37	6.3×7	39		
22	5×7	33	5×7	37	6.3×7	42	6.3×7	45	6.3×7	49		
33	5×7	41	6.3×7	45	6.3×7	52	6.3×7	55				
47	6.3×7	49	6.3×7	55	6.3×7	62						
68	6.3×7	59	6.3×7	65								
100	6.3×7	73										

Rated Ripple Current (mArms/85˚C, 120Hz)
Case Size ø D×L(mm)

RATINGS OF LL Series

μF \ VDC	6.3		10		16		25		35		50		63		100	
1											5×11	16			5×11	19
2.2											5×11	23			6.3×11	31
3.3											5×11	28			8×11.5	44
4.7							5×11	28	5×11	31	6.3×11	38			8×11.5	52
10					5×11	39	6.3×11	47	6.3×11	51	8×11.5	64	8×11.5	64	10×16	100
22			5×11	51	6.3×11	66	8×11.5	80	8×11.5	87	10×12.5	112	10×16	124	10×20	160
33			6.3×11	72	6.3×11	80	8×11.5	98	10×12.5	125	10×16	151	10×16	151	12.5×20	217
47			6.3×11	86	8×11.5	110	10×12.5	138	10×12.5	149	10×16	181	10×20	196	12.5×25	282
100			8×11.5	143	10×12.5	189	10×16	223	10×20	260	12.5×20	316	12.5×25	344	16×25	455
220	10×12.5	229	10×16	276	10×20	335	12.5×20	397	12.5×25	466	16×25	564	16×31.5	607	18×35.5	775
330	10×16	309	10×20	367	12.5×20	454	12.5×25	528	12.5×25	631	16×31.5	744	16×35.5	761	18×40	964
470	10×20	399	12.5×20	485	12.5×20	542	16×25	697	16×25	753	16×35.5	908	18×35.5	948		
1,000	12.5×25	702	12.5×25	769	16×25	951	18×35.5	1,120	16×25	1,262	18×40	1,404				
2,200	16×25	1,107	16×31.5	1,295	18×35.5	1,529	18×40	1,647								
3,300	16×35.5	1,438	16×35.5	1,554	18×40	1,804										
4,700	18×35.5	1,676	18×40	1,820												

Rated Ripple Current (mArms/85˚C, 120Hz)
Case Size ø D×L(mm)